Plasti·Fab®
EPS PRODUCT SOLUTIONS
Better building ideas from PFB™

The Advantage ICF System® Installation Manual

The Advantage ICF System®

Recommendation: Review the Advantage ICF System Installation Videos.

When building with the Advantage ICF System please review your local building code requirements with your local building officials before your permitting stage.

INTRODUCTION

This manual is designed to help contractors and installers construct a building using the Advantage ICF System®. It is written as a plain-language guide to supplement (not replace) the building code and occupational health and safety regulations in your area, as well as your engineering design.

Installation of the Advantage ICF System should occur under the direct supervision of either:

- an experienced ICF installer (complete with references),
- a journeyman carpenter (complete with a valid carpenter's ticket),
- a trained professional in the concrete industry (complete with references) or,
- an Advantage ICF System trained installer.

In all cases, before you start work, you are required to check with your local building inspector or development officer for local engineering and building code requirements.

You should know that local codes and regulations, when in place, supersede provincial, state or national building codes. Also, some jurisdictions require soils reports from an engineer before work can start.

This manual contains the following information:

1. An overview of the Advantage ICF System product.
2. A step-by-step installation guide which includes a list of tools and materials you will need, as well as tips and detailed help on potential problem areas.
3. A glossary of terms to help you fully understand instructions.

Plasti-Fab® also publishes an Advantage ICF System Technical Manual that provides more detailed information regarding engineering requirements. The tables in the Technical Manual provide steel reinforcement designs for a number of different wall and lintel applications based on the structural loads and the design assumptions indicated below each table. Please contact Plasti-Fab at 1-888-446-5377 should you require a copy.

TABLE OF CONTENTS

ADVANTAGE ICF SYSTEM DESCRIPTION

The Advantage ICF System is designed as a “monolithic flat insulating concrete form (ICF)”. One block comprises two corresponding panels made from expanded polystyrene (EPS) insulation. The EPS panels function as the form and are held together with high-density plastic webs (or ties) spaced 203 mm (8”) on centre for the 152 mm (6”) concrete wall form or 152 mm (6”) on centre for the 203 mm (8”) concrete wall form. Once a series of blocks have been assembled to form a wall with the appropriate steel reinforcement, concrete is poured inside the blocks to create a uniform structural wall system. With the application of appropriate interior and exterior wall finishes, the resulting structural concrete wall has exceptional fire, sound, and insulating characteristics.

The 152 mm (6”) standard block is 419 mm (16 ½”) high and 286 mm (11 ¼”) wide and 1219 mm (48”) long to perfectly fit to dimensional lumber. The 203 mm (8”) standard block is 419 mm (16 ½”) high and 336 mm (13 ¼”) wide and 1219 mm (48”) long. Blocks also come in 90 degree and 45 degree corners as well as 190mm (7 ½”) height adjusters units.

See next page for Advantage ICF System product specifications. If you are reading this document at the planning stage of your project, you may wish to factor block dimensions into your plans if you want to save time on construction.

Figure 1: Advantage ICF System Block.

ADVANTAGE ICF SYSTEM PRODUCT SPECIFICATIONS

Product	Feature	152 mm Metric	6" Imperial	203 mm Metric	8" Imperial
Standard Block 	Height: Width: Length:	419 286 1219	16-1/2" 11-1/4" 48"	419 337 1219	16-1/2" 13-1/4" 48"
Corner Block 	Height: Width: Length:	419 286 813 x 406	16-1/2" 11-1/4" 32" x 16"	419 337 737 x 432	16-1/2" 13-1/4" 29" x 17"
7-1/2" Height Adjuster 	Height: Width: Length:	191 286 1219	7-1/2" 11-1/4" 48"	191 337 1219	7-1/2" 13-1/4" 48"
Taper Top Block 	Height: Width: Length: Bearing at Top:	419 286 1219 249	16-1/2" 11-1/4" 48" 9-3/4"	419 337 1219 292	16-1/2" 13-1/4" 48" 11-1/2"
45° Corner Block 	Height: Width: Length:	419 286 645 x 241	16-1/2" 11-1/4" 25-3/8" x 9-1/2"	419 337 540 x 236	16-1/2" 13-1/4" 21-1/4" x 9-1/4"
Brick Ledge 	Height: Width at Top Width at Bottom: Length:	419 400 286 1219	16-1/2" 15-3/4" 11-1/4" 48"	419 451 337 1219	16-1/2" 17-3/4" 13-1/4" 48"

TOOLS AND EQUIPMENT

The following tools and equipment will be required:

- Hammer
- Chalk line
- 48” level
- Rebar bender / cutter
- Cordless drill and driver bits
- Lineman’s pliers
- Handsaw
- Keyhole or drywall saw
- Concrete vibrator – 1” to 1 ¼”
- Scaffolding / bracing system
- Ladder(s)
- Sledgehammer
- Circular saw (preferably 8 ¼”)
- Metal cut off wheels for circular saw
- Rebar wire-tie twister
- Felt-tipped permanent marker
- Tin snips
- String lines

MATERIALS

The following materials are required to complete an Advantage ICF System wall:

- Advantage ICF System blocks
- Rebar wire or rebar wire twist-ties (16 gauge x 5”-6”)
- 1” / #8 deck screws
- 1¾” / #8 deck screws
- 3” / #10 deck screws
- Advantage ICF System sheathing tape or Tuck Tape
- Low expansion foam and dispenser
- 610 mm (24”) multi straps (optional)
- Scaffold planking (see scaffolding / bracing in glossary)
- Rough opening (RO) material (see rough openings in glossary)
- Anchor (J) bolts
- Advantage ICF System multi-straps
- 24” zip straps

FOOTINGS

The footing is the concrete base that is used to spread the load from the foundation walls onto the soil below.

Preparation

It is well worth making the effort to ensure your footings are square and level. Not only will square and level footings save you time laying out your wall lines and placing your first and succeeding courses (horizontal rows) of block, but they will make the job much easier.

A footing placed and finished accurate to ± 6 mm (¼”) in elevation, this is a good starting point. If the footings are not within these tolerances, it may be necessary to shim up or trim the bottom of the first course of block to make a level surface for the following courses and to keep your corners plumb and wall lengths correct.

Width

Footings need to be laid out to accommodate the width of the forms (Figure 2). The centreline of the footing becomes the centreline of the wall.

For example, on a 610 mm (24”) footing, the measurements for the portion of the foot remaining on the outside edge of the forms would be:

1. For the Advantage 152 mm (6”) forms which are 286 mm (11 ¼”) wide, 162 mm (6 3/8”) of the footing will remain exposed on each side of the form.

2. For the Advantage 203 mm (8”) forms which are 336 mm (13 ¼”) wide, 137 mm (5 3/8”) of the footing will remain exposed on each side of the form.

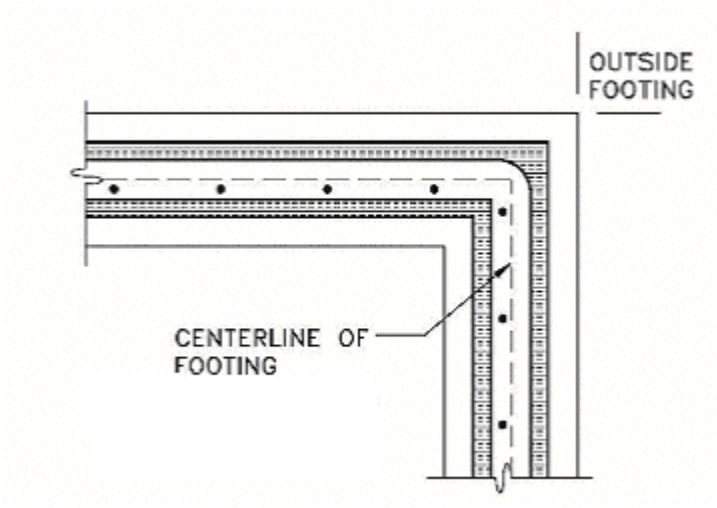

Figure 2: Placement of Block on Concrete Footings

Step Footings

In the case of step footings, we recommend a step height of 419 mm (16 ½") since this matches the height of a standard form. This step height can be accomplished by stacking three, 2x6s on edge. Check with local building officials as to the maximum rise and minimum run for step footings in your area, or refer to the appropriate building code.

The diagram and photograph below (Figures 3 and 4) illustrate how step footings can work with the Advantage ICF System blocks **when the web is more than 3 inches from the step**.

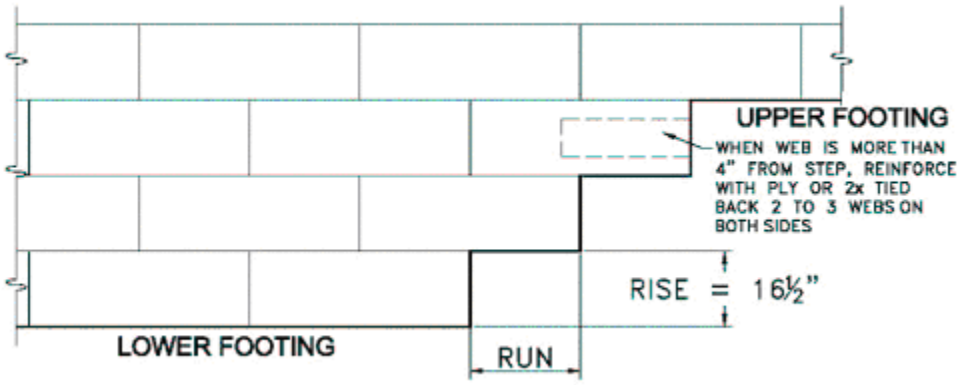

Figure 3: Diagram to illustrate step footings.

Figure 4: Photograph of Step Footings and Block

Dowels

Steel reinforcing dowels to match the size of the vertical reinforcement at a maximum spacing of 610 mm (24") on centre with minimum 203 mm (8") embedment and 75 mm (3") concrete cover in the footing. Dowels to extend above the top of the footing to provide a minimum embedment in the foundation wall of 450 mm (18") for 10M or 650 mm (26") for 15M rebar (Figure 4). See wall to footing connection detail drawing for further information.

FOUNDATION WALL LAYOUT

In this section, we provide instructions on how to prepare to place blocks on the surface of the footings accurately.

This step is completed before any block or rebar is brought into the working area.

Chalk Lines

Mark the outside corner points of the building on the footing. The corner points can be established from the surveyor's offset pins.

Snap a chalk line from the corner points marked on the footing in order to establish outside wall lines. To mark inside wall lines measure the required block width towards the inside of the building and snap chalk lines accordingly.

Accuracy

Always make sure that all dimensions are correct and that the layout is square. There are four ways to make sure your corners are 90 degrees:

1) Both diagonals should be the same length if the building is a true rectangle or square. Or, if you refer to Figure 5, the following formulas apply:

$$A^2 + B^2 = C^2 \qquad \text{or} \qquad C = \sqrt{A^2 + B^2}$$

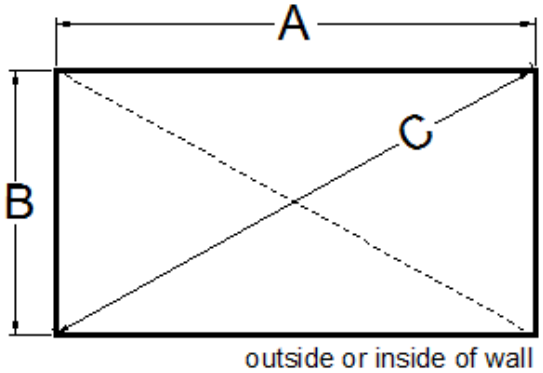

Figure 5: Sketch to illustrate one method of ensuring your walls are square.

2) Attach batter boards to the offsets pins and set string lines from batter board to batter board around the building. Transfer the building lines from the string lines to the top of the footings using a plumb bob or a level. Double check using method above.
3) The 3-4-5 method is a quick way to check for square within the multiples shown in Figure 6 below. It is not recommended for a full building layout since it is not as accurate.
4) **It is always good practice to have your surveyor return after footings are placed to locate the building's corner pins.**

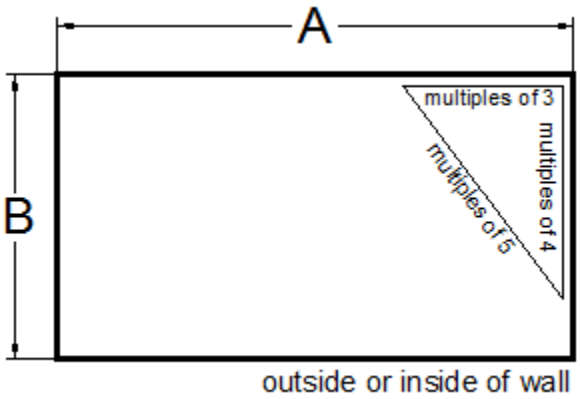

Figure 6: Sketch to illustrate the 3, 4, 5 method of ensuring your wall is square.

Kickers

Once the lines are chalked, nail a 610 mm (24") 2x4 kicker each way at outside corners, as shown below (Figures 7 and 8). Kickers keep your corner forms positioned properly while you run your first course of block.

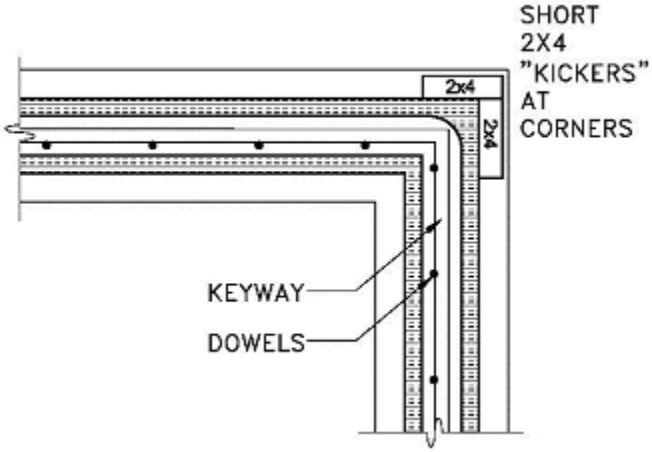

Figure 7: Diagram to illustrate location of kickers.

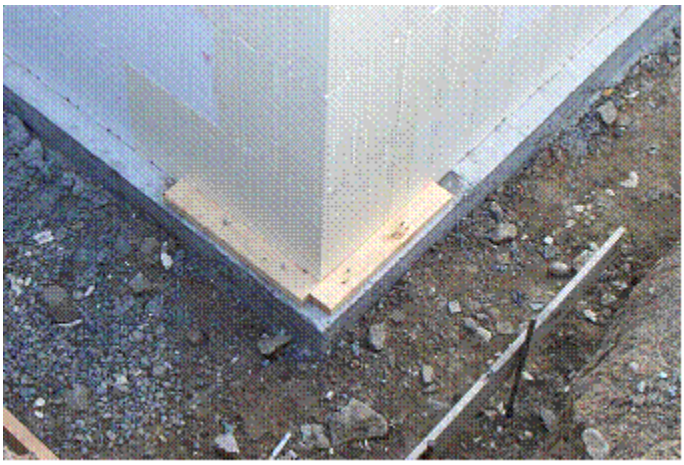

Figure 8: Photograph to illustrate placing of kickers.

Continuous Kickers

Nail down lengths of 2x4's from corner kicker to corner kicker following the chalk line marked on the footings. Continuous kickers help keep walls straight during the concrete pour.

Mark up Footings

Once the kickers are in place, it is worth laying out important information on the footings, such as the location and rough opening sizes of any windows or doors.

Rough Bucks

Rough bucks are stud openings in a wall into which door and window frames are mounted. Now is also the time to construct rough bucks (or RO bucks) and place them near their locations. See page 21 for more details.

LOAD THE HOLE

'Load the hole' refers to the part of the construction process in which construction materials are brought inside the footings area.

1) Bring the rebar, scaffold/bracing material and the block inside the footings.
2) Cut the rebar to length, remembering to account for any lap lengths required (refer to your design detail drawings), and place it along the footing at the wall for which it is cut.
3) Place 610 mm x 610 mm (2'x2') pre-bent corner bars (1 per horizontal row) at the corners of the building.
4) Stack bundles of block inside the basement area, leaving enough room between the footings and the stacks to work. Remember to inspect the blocks for damage.
5) Stack the corner blocks in pairs (one left-hand and one right-hand) near the corners where they will be used. Remember to inspect the blocks for damage.

Rebar and lumber for scaffolding

Corner blocks stacked inside work area

Blocks stacked inside work area

Installation started

Figure 9: Loaded Hole

FIRST COURSE

In this section, we provide instructions on how to lay the first row of blocks on top of the footings.
Note: window and door openings should be marked on the footing (outside edges (width) of the rough bucks as well as the opening height) for reference when block installation starts.

First and Subsequent Blocks

1. Starting at any corner (#1), place a left or right-hand corner block tight to the 2x4 corner kickers. Work away from the corner towards the next corner (#2) using standard blocks,
2. Stop laying block when you get close to the centreline of a window or door opening (these are the best places to make joints in the walls).

Note: *If there is no opening in the wall pick a desired location for the filler area (Example: where a perpendicular framed wall intersects the Advantage ICF System wall)*

3. Starting at corner #2 place the opposite shaped corner that you used at corner #1. Make sure corner #2 is tight to the 2x4 corner kickers.
4. Lay standard blocks working towards the opening where you ended with the first standard blocks.
5. A filler will likely have to be cut right under the opening. The filler is made simply by cutting one end of a standard block to the length that is required to fill the gap that is remaining under the opening.(be sure to put the cut end towards where you ended with the first standards near the centre of the opening)
6. Cleat both sides of the cut joint with plywood cleats long enough to fasten to the webs of the two adjacent standard blocks, or temporarily tie the cut joint together with rebar wire, banding, or zip straps – cleating after the wall is up a maximum of three courses.
7. The first course should be glued to the footing with a light bead of low-expansion foam or continuous kickers should be installed once the wall is three courses high or completed which ever comes first.
8. Attach the corner block to the adjacent standard blocks using Advantage ICF multi-straps as described in figure 22.

Filler Blocks

When you create a filler block, it is necessary to pay attention to web locations. The distance between webs is 152 mm (6”) when using the 203 mm (8”) blocks and 203 mm (8”) when using the 152 mm (6”) for blocks. The distance between webs should not be more than these standard web spacings so that the ‘ear’, or piece of EPS form between the web and the end of the block should not be greater than half the web spacing (100 mm (4”) for the 152mm (6”) block or 75 mm (3”) for the 203mm (8”) block. If either of these scenarios exists, then additional cleats will be required. In order to achieve acceptable web spacing, you may also need to trim the blocks adjacent to the filler block.

Cutting Filler Blocks

The diagram below illustrates how to cut filler and adjacent blocks

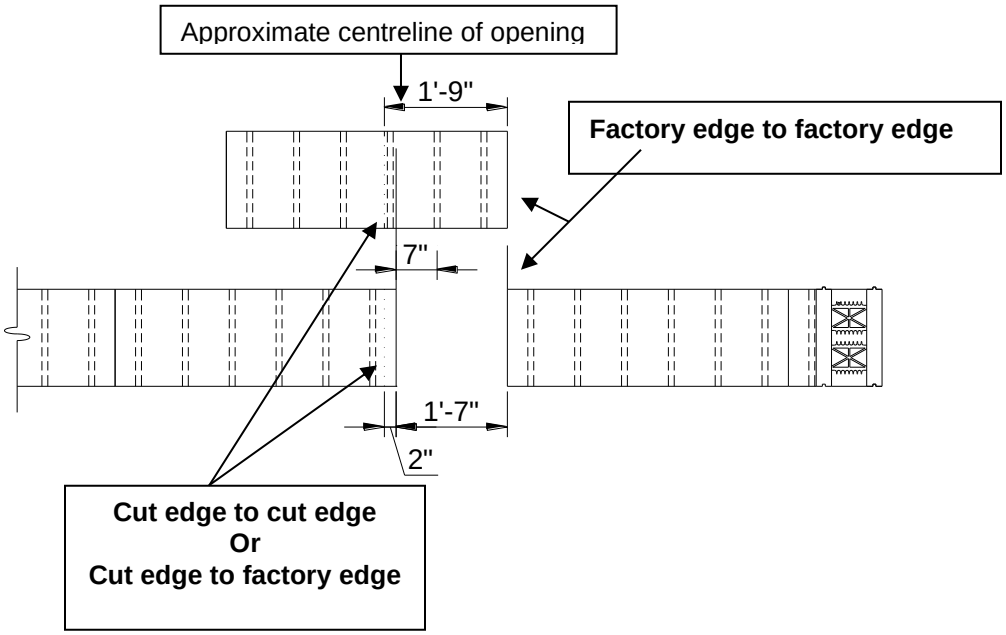

Figure 10: Diagram to illustrate the correct way to cut filler blocks.

Note that an indented line marks all Advantage ICF System blocks at 25.4 mm (1”) intervals to simplify measuring and marking. Double lines mark web locations.

Once a filler block has been installed, it is worth making note of the cut lengths with your permanent marker directly onto the blocks, since this scenario will be repeated on the third, fifth and subsequent alternate courses.

See first course instructions on page 15 for filler locations.

Steel Reinforcement

Once the first course is complete, place rebar horizontally in the appropriate rebar clips in the web, following the design detail drawings for your application. Stagger the rebar as shown in the diagram below. The rebar is staggered in order to support the vertical rebar. Vertical rebar installed once the wall is at full height.

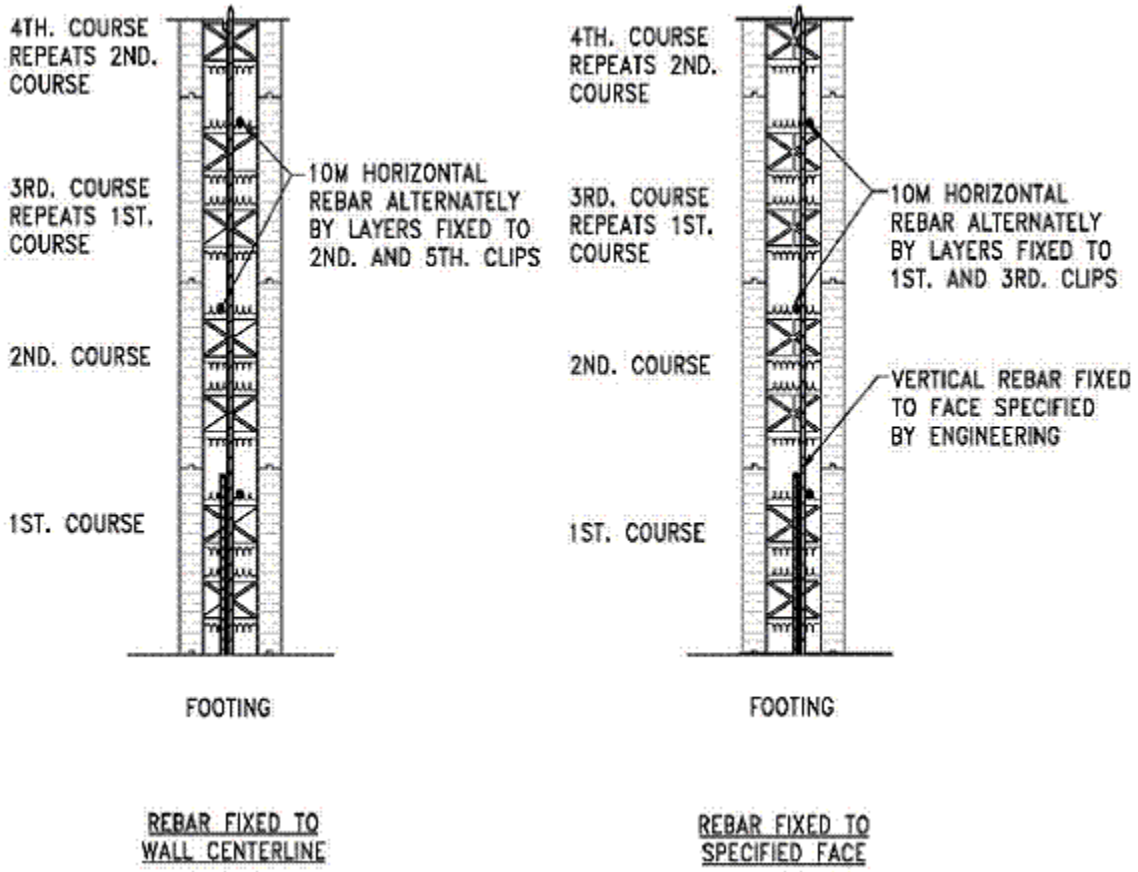

Note: Horizontal & vertical rebar overlapped 450 mm (18”) for 10M bar and 650 mm (26”) for 15M bars

Figure 11: Diagram to illustrate placement of horizontal steel reinforcement.

SECOND COURSE

This chapter describes how to place the second and subsequent courses of block on top of the first course. The chapter starts by describing some block features and techniques that are important to be aware of before you start laying the second course. Instructions begin at the 'Corner Blocks' heading. Always be aware of the location of any doors or windows. We describe how to deal with openings in the chapter entitled 'Openings'.

Interlocks

You will notice the Advantage ICF System blocks feature 'interlocks', a ridge and tabs on the top and matching indentations on the bottom of each EPS panel (Figure 11). The interlocks are designed to help hold the blocks together when they are stacked on top of one another.

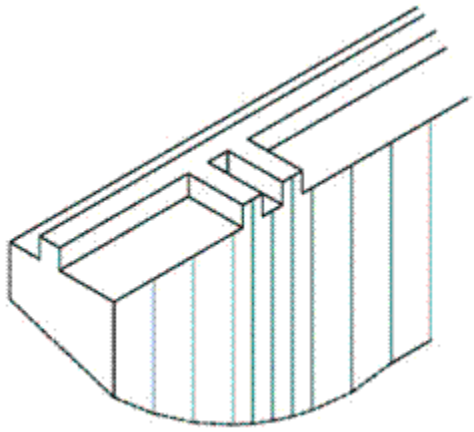

Figure 12: Interlocks.

Sometimes it is necessary to strike the top of the block with the palm of your hand to set the interlock on the block below. It is important for the alignment of your wall to ensure that the blocks are fully interlocked. Check for obstructions if the interlocks do not appear to fall into place properly.

Setting Blocks

When you set the blocks, always work from the open end towards the block previously placed. The purpose of this technique is to keep the joints tight. See Figure 12.

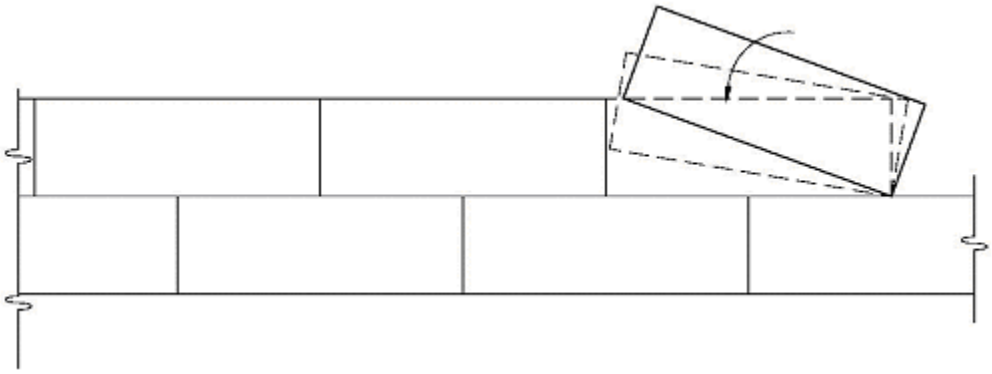

Figure 13: Setting Blocks.

Corner Blocks

Start the second course of block at the same corner you started the first course. Place an opposite-hand corner block on the one below. For example, if you used a right-hand corner on the first course, use a left-hand corner on the second course. Glue the two corner blocks together with a very light bead of low-expansion foam.

Standard Blocks

Continue the course with full standard blocks. Remember to fasten the blocks to the corner blocks with multi-straps. You should notice that the blocks have an offset from course to course.

Filler Blocks and Interlocks

In a course that requires a filler block, we recommend you always maintain the factory offset in order to keep the interlocks aligned.

- The factory offset for the 152 mm (6”) block is 406 mm (16”)
- The factory offset for the 203 mm (8”) block is 305 mm (12”)

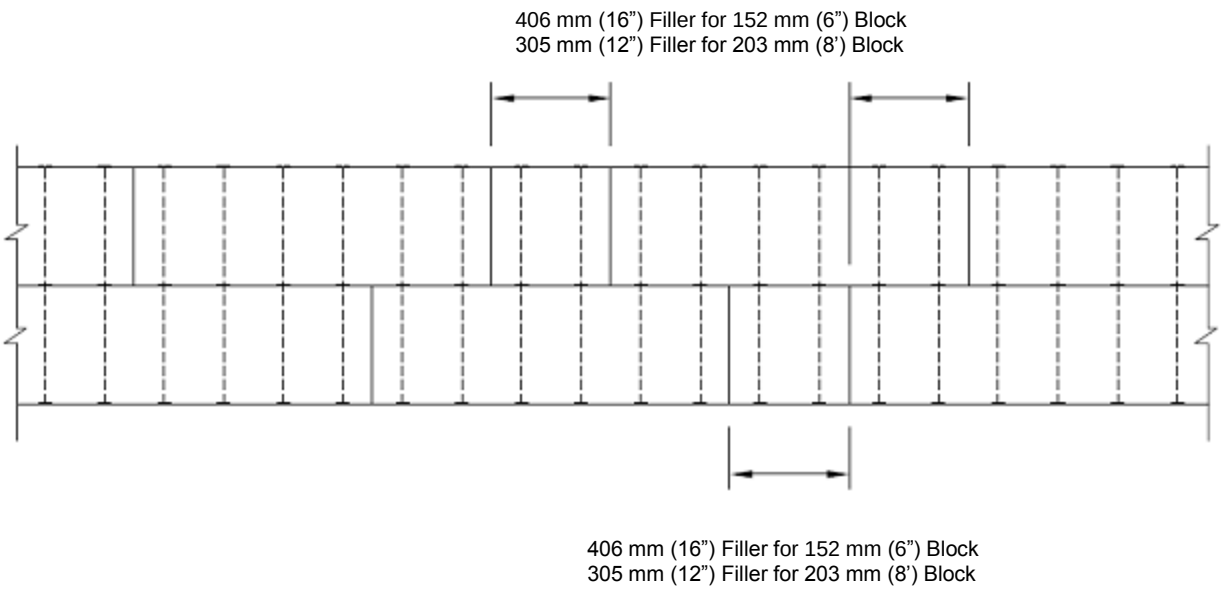

Figure 14: Filler blocks

Figure 14 illustrates typical filler block for 152 mm (6”) block. Filler blocks are cut to line up with the filler block one course below. The filler block cut should be in the same location and in line with the same location from the first course to the final course. Cut edges of block should be cleated on both sides.

NOTE: Always measure the wall length for each course to ensure wall lengths are exact from course to course.

Rebar

Once the second course of block is in place, install the horizontal rebar two rebar clips over from rebar in the course below as shown in Figure 10 on page 16.

SUBSEQUENT COURSES

Pattern

A pattern of block placement will emerge after the first two courses have been placed. Odd and even courses will each have the same block pattern. In other words, courses 1, 3 and 5 will be the same as each other, and courses 2, 4 and 6 will be also the same as each other.

Filler Blocks

Filler blocks should remain the same length on alternating courses. If you find the length of your filler blocks are not consistent with those of previous courses, check your corners are plumb and that the overall length of the walls in question is the same at different heights.

Openings

Continue to lay courses until you reach the location of a wall opening, typically a window or a door. How to deal with openings is described in detail in the next chapter.

Alignment

Once three courses have been set, check the kickers. If kickers were not set after the first course, use low expansion foam to glue the Advantage ICF System wall to the footing on 2' centres.

OPENINGS

In this chapter, we describe how to deal with openings in a wall. Openings are typically required for doors and windows. We describe how to construct a frame, or rough opening buck, to support the opening and how to place the Advantage ICF System blocks around the bucks.

Rough Opening (RO) Bucks

An RO buck is a lumber frame which is used to form the opening in which a window or door will be placed. It is designed to allow concrete to be poured through it into the blocks that sit below it. A diagram of an RO buck is provided below:

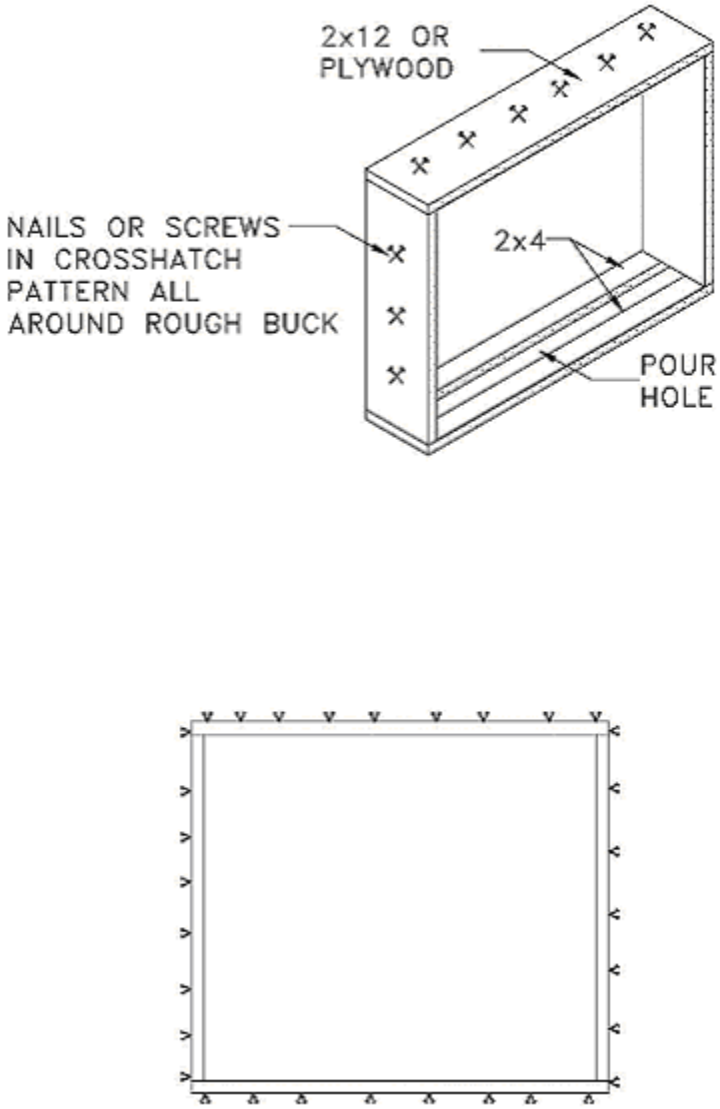

Figure 15: Rough Opening (RO) Bucks (3D and elevation).

Use lumber or plywood to form the top and sides only of the buck. Use either with 2x12 dimensional lumber or 25.4 mm (1”) plywood cut to a width to match the width of the forms being used.

Use two 2x4 lumber pieces to form the bottom of the buck. Line up the outside edges of the 2x4s with the outside of the sides of the RO buck (Figure 14), to leave a 108 mm (4¼”) pour hole in the centre. This hole will be used to place and vibrate the concrete, which is added once the walls are complete.

Place nails or screws in a crosshatch pattern all around the RO buck (Figure 14). These nails or screws will help anchor the RO buck to the concrete core of the wall once the concrete has been poured.

Placing RO Bucks

Place courses of block as described in previous chapters until you reach the height of the bottom of the rough opening. Place rebar as specified before putting the buck in place.

Place a completed RO buck in the designated location. Fasten the buck to the ICF wall and ensure it is plumb and level.

Brace the RO buck with lumber or plywood to keep it firmly in place. If the RO bucks are greater than 914 mm x 914 mm (36” x 36”), we recommend you brace the interior to keep unsupported buck lengths less than 914 mm (36”) both horizontally and vertically. Diagonal braces may also be added corner to corner to keep the RO bucks square. Figure 15 below illustrates RO buck bracing:

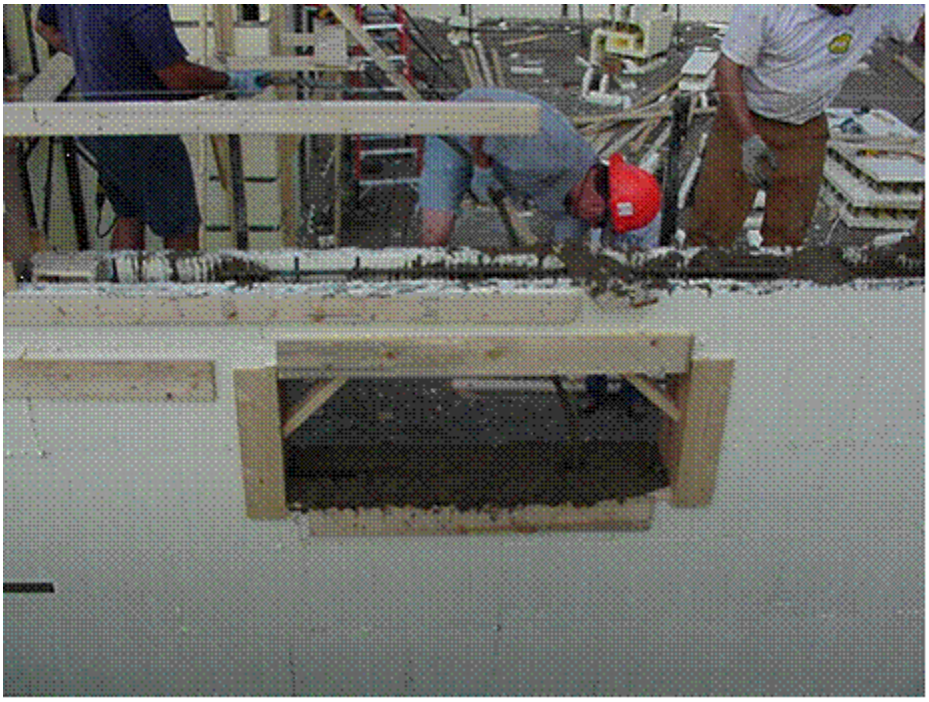

Figure 16: Photograph to illustrate RO Buck bracing.

Block Pattern

Continue to follow the course pattern previously established up to and around the sides of the RO bucks. Following the course pattern will allow the interlock system to match up when you span over the top of the RO bucks.

Note that cut-off pieces of block with at least one factory edge and one tie can be used elsewhere in the wall.

Bracing

Blocks in the courses that are interrupted by RO bucks need to be cut in order to accommodate the RO bucks. Bracing around the RO buck has two functions:

1) It keeps the block and RO buck aligned.
2) It keeps the unsupported edge of the block from spreading outwards when the concrete is being poured and vibrated.

Use strips of plywood and screw them to the RO buck and block on the inside and outside of the wall (Figure 16). Alternatively, use a multi-strap the same way as plywood.

Finally, use tape, plywood or a multi-strap to secure the bottom 2x4s to the block below when rough buck widths are greater than 914 mm (36”). This prevents the 2x4s from lifting (bowing) when the concrete is placed and vibrated.

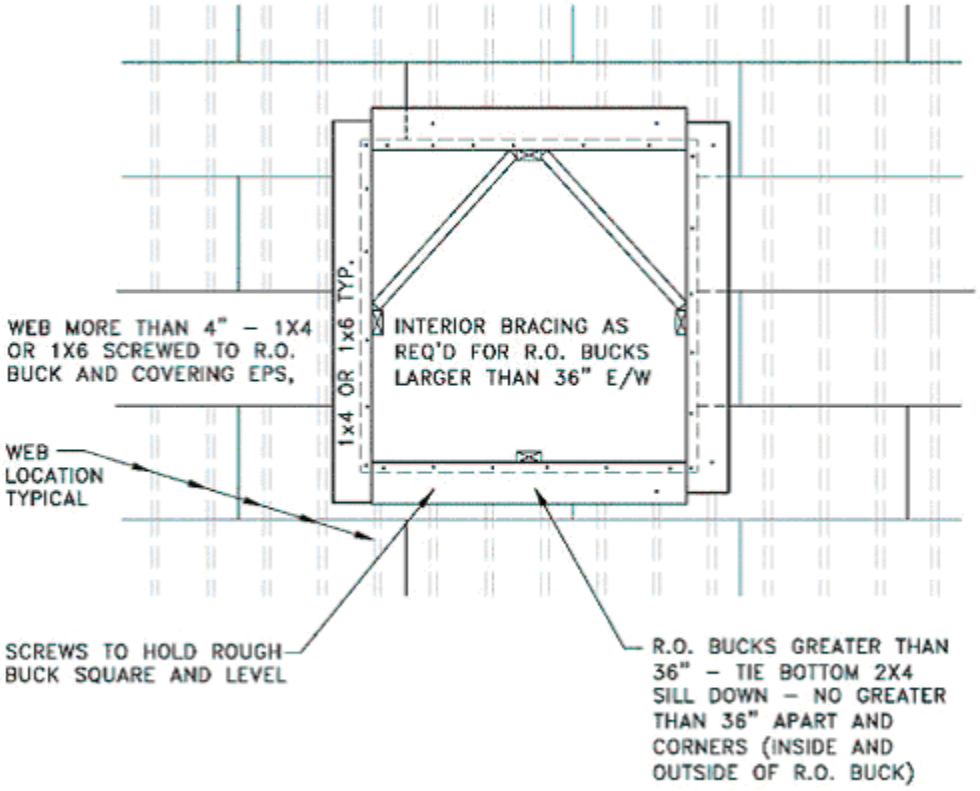

Figure 17: Diagram to illustrate RO buck bracing. Note that intermediate bracing has not been shown in this diagram for clarity.

SCAFFOLDING AND BRACING

This chapter describes how to install a scaffold and bracing system. These systems support the walls and allow people to work off the ground to reach higher up the walls. In this chapter, we describe how to install both a prefabricated and a lumber scaffold and bracing system. We assume that you are familiar with the principals and components of such systems.

There are various manufacturers of prefabricated scaffold and bracing systems. These systems typically consist of a 2440 mm to 3658 mm (8' to 12') metal channels with screw slots every 203 mm (8"). The channels are fastened to the vertical plastic webs of each block with 45 mm (1 ¾") screws. Please contact Plasti-Fab if you want more information about pre-fabricated systems. Many contractors, however, prefer to fabricate their own braces from 2x4 or 2x6 lumber and 76 mm (3") screws. We have used a lumber bracing system in the photographs used in this chapter.

Once you have completed the third course of blocks it is time to install the scaffold and bracing system. If you are tall enough, you may be able to install the scaffolding after you have set the fourth course of blocks.

Braces

Attach the vertical part of the braces to the walls at 1625 mm to 1676 mm (5'-4" to 5'-6") intervals starting 203 mm to 610 mm (8" to 24") from each corner. Screw the braces into the ties using 76 mm (3") screws as shown in the series of three photographs below (Figure 17). Use at least one screw per course. You will need to hold down, or get someone else to hold down, the top course of block to ensure it does not lift off the block below when you are screwing the screws into the ties.

Figure 18: Photographs to illustrate placement of vertical scaffold braces.

Scaffold

Attach scaffold brackets and/or handrail brackets to the vertical braces. These brackets are usually placed roughly 762 mm to 914 mm (30” to 36”) from the finished pour height of the wall or whatever height constitutes a comfortable working height to place and finish the concrete (Figure 18).

Figure 19: Series of three photographs illustrating placement of scaffold brackets.

Turnbuckles

Turnbuckles are adjustable bracing devices that hold walls steady (Figure 19). Adjust the alignment of walls before and after the concrete has been poured using turnbuckles.
Note: Turnbuckles or form aligners are available at most concrete specialty outlets.

Figure 20: Photographs illustrating turnbuckle system.

Install the turnbuckle part of the bracing system. Attach the diagonal brace, complete with turnbuckles, to the vertical braces with a 13 mm (½”) bolt or a short piece of 10M rebar (or 51 to 76 mm (2 – 3”) screws if you are using dimensional lumber). Before securing the bottom part of the unit to the ground, make sure the turnbuckle is adjusted to a central point. This will make it easier to make adjustments later on.

Using a 1219 mm (4’) level as a guide, lean the top of the wall in 13 mm to 19 mm (½ to ¾”) (Figure 20), and secure the base of the turnbuckle to the ground. The reason for leaning the wall inwards slightly is that as the concrete is placed, the bracing will tighten up and the wall will have a tendency to lean to the outside. With the wall pulled in slightly, it is likely to move closer to plumb during this process. Moreover, it is much easier to push the wall out with the turnbuckles than to pull it in.

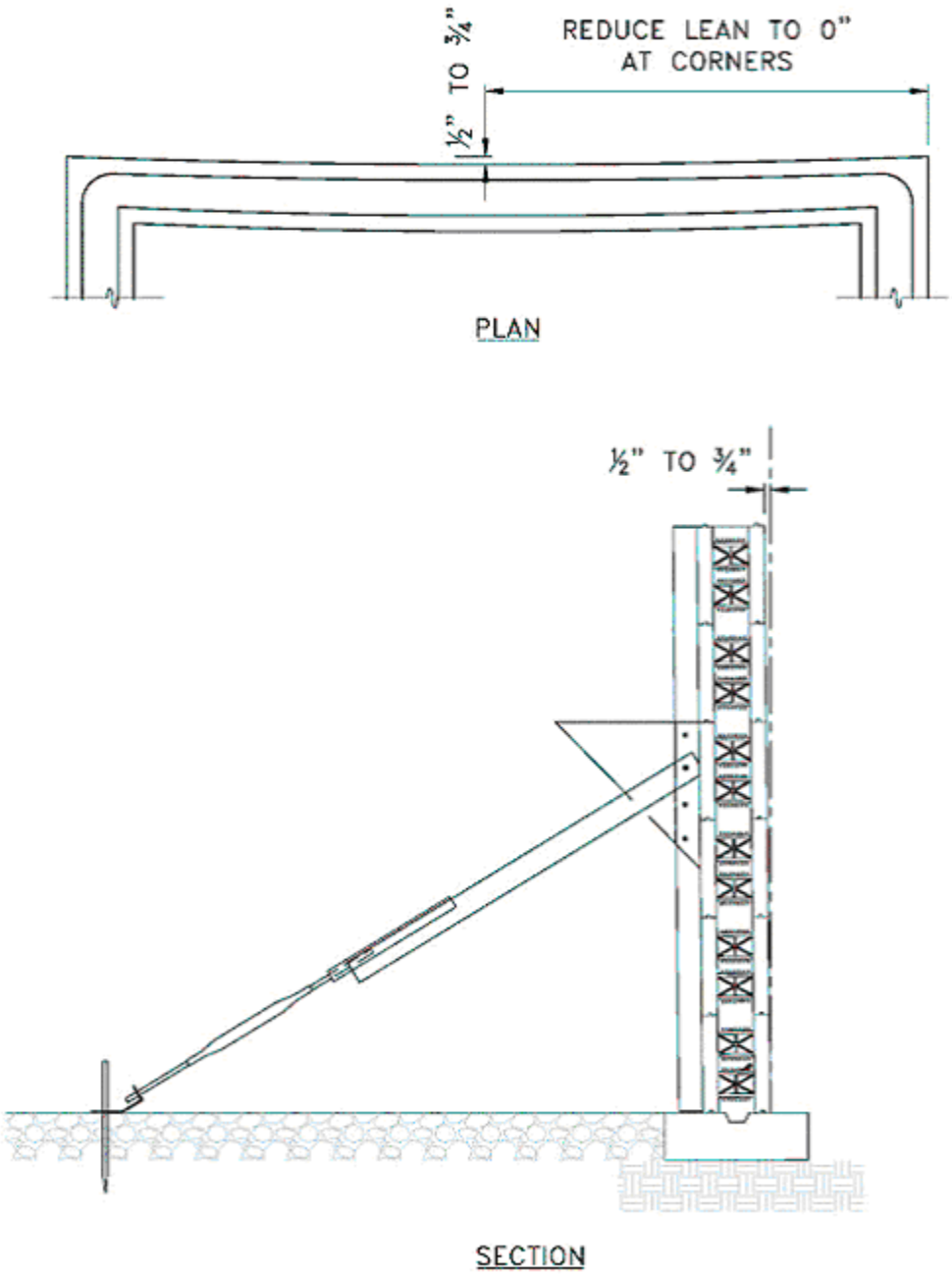

Figure 21: Diagram to illustrate inward lean towards scaffold side of wall.

TOP COURSE

This chapter describes how to place the final course of blocks on a wall.

Glue or Tape

This final course differs from previous courses in that the blocks need to be secured to the previous course using either low-expansion foam or tape on the inside and outside of the joints. Gluing or taping is required to stop the top course from tipping or separating from the course below when the concrete is poured. It also keeps the wall aligned vertically, especially if this course is higher than the scaffolding.

Ribbon (or Line Up) Rail

Install a 2x4 or 2x6 ribbon or line-up rail around the outside at or near the top of the wall (Figure 21). Fasten the ribbon rail to the block to every third web with a 3” screw. This helps to keep the top of the last course rigid when the concrete is placed and the wall is aligned.

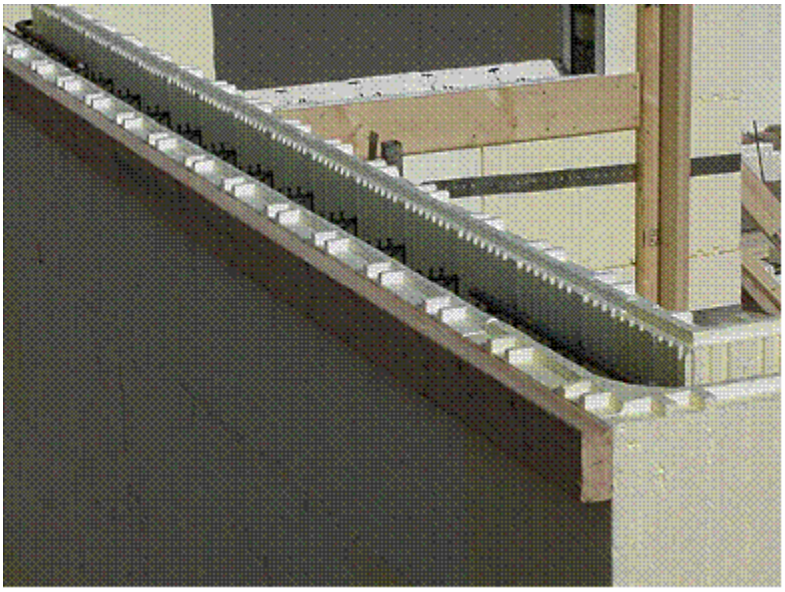

Figure 22: Photograph illustrating a ribbon line.

String Line

Run a string line along the length of each wall on the ribbon rail to check whether the wall is straight or not. Adjust the turnbuckles accordingly.

Interlock Protection

If the building is continuing beyond the basement level using the Advantage ICF System, protect the interlock from damage by covering it with tape

Beam Pockets, Sleeves and Inserts

Any beam pockets, sleeves or inserts should be installed once the top course has been laid.

Rebar

Install the specified vertical reinforcing steel by sliding it down between the offset lengths of horizontal rebar. This creates a 'weave' effect that enables the horizontal rebar to hold the vertical rebar in place.

Corners

On walls that are up to 6 rows or courses high, it is recommended to tie the corner blocks back to the first full block using the multi-strap at the middle of the form at each course. If the wall is seven courses high then it is recommended to use 2 multi-straps on the bottom course, in the case of eight courses, the bottom two courses should have 2 multi-straps and so on. The strapping is illustrated in the photograph below:

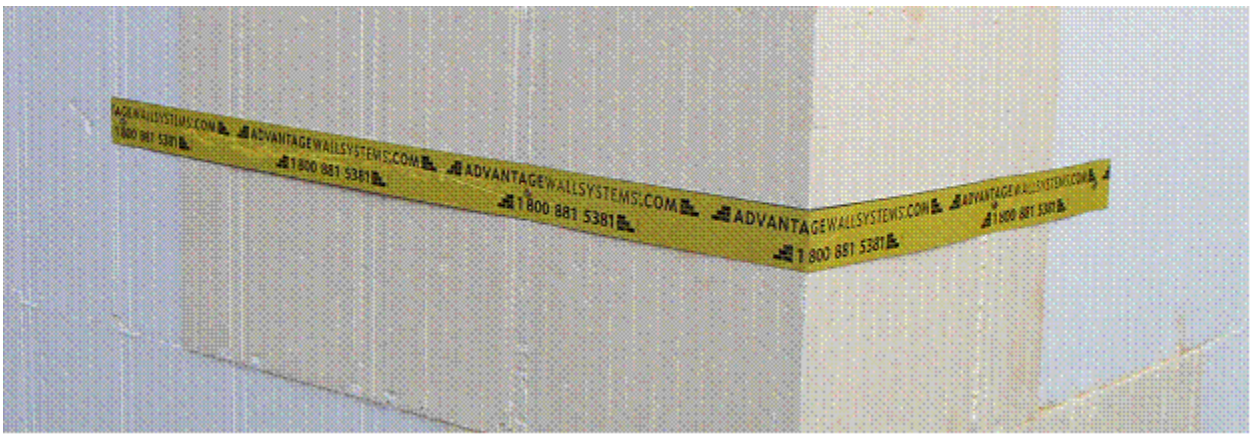

Figure 23: Photograph illustrating multi-strap on corner.

PRE-POUR CHECKLIST, PLACING AND FINISHING

Check the listed items prior to pouring any concrete.

1. The blocks on the first course are set on the chalk lines.
2. All T corners (see page 33) and T back bracing is in place.
3. All free standing walls are braced on both sides and plumb. (This wall should be very rigid and not able to move.)
4. All rail ribbon is in place together with string-lines attached, ready for wall alignment.
5. You have extra pieces of plywood and bracing material at hand ready to deal with the unexpected. Rarely, EPS forms that have been damaged during shipping or while handling may blow out during the concrete pour. These panels can be put back into position and reinforced by running a piece of 13 mm to 19 mm (½" – ¾") plywood across the panel and fastening it to the webs on either side of the break.
6. You have a 25 mm to 32 mm (1" to 1¼") vibrator.
7. The concrete pump operator has a double-90 degree elbow for the discharge end of the pump. This is not absolutely necessary as long as the discharge speed can be reduced. It is important to remember that the concrete should not be dropped more than 2438 mm (8') in order to prevent damage to the polystyrene.
8. The specified strength, aggregate size, and slump, as well as the quantity of concrete have been ordered.
9. The tabs on the blocks of the top course have been protected if you intend to add a second floor of blocks.
10. You have sufficient help on hand to place, align, finish and clean up after the pour. We recommend a five person crew: one to handle the hose pump, two to vibrate, one inside the wall and one outside the wall.
11. You have an auto-level or laser level if you intend to level the top of the wall.
12. You have anchor bolts on site if required.
13. The beam pockets are in place.
14. Rebar properly placed as per Technical Manual requirements or engineer's specifications.
15. Note: Structural engineer or representative may have to inspect rebar placement prior to pour. Make sure proper notice is given for this inspection.

PLACING AND FINISHING THE CONCRETE

This chapter describes important considerations when organizing and pouring the concrete. It is strongly advised that you obtain help from experienced ICF installers if this is your first ICF concrete pour. For installation advice, please call our toll free help line at 1-877-832-4146.

Pour Rate

The rate of pour should not exceed that recommended by the American Concrete Institute shown below:

Temperature Degrees C (F)	Pour Rate Feet per Hour (Metres per Hour)
4.4 (40)	2.20 (0.67)
10 (50)	2.75 (0.84)
16 (60)	3.03 (0.92)
21 (70)	3.85 (1.17)
27 (80)	4.40 (1.34)
32 (90)	4.95 (1.51)

Personnel

The optimum crew size while placing and finishing the wall is five people, one placer, two on the vibrator, one on the outside to check pour height and watch for incidences, and one inside to do likewise. When the final lift is in progress, the last two crew members can start the aligning process. When the pour is complete, the placer and vibrator people are free to level the top of wall and to place any anchor bolts.

Method

The ideal concrete slump is between 102 mm and 152 mm (4” and 6”). A 1219 mm to 1524 mm (4’ to 5’) wall can be filled and vibrated in one pass with only a little topping-up. An 2438 mm (8’) (or 6-course) wall should be filled in two passes, first a 1219 mm (4’) lift followed by vibration, then filled to grade and vibrated again. It is advisable to fill walls higher than 2743 mm (9’) in lifts not exceeding 1219 mm (4’). Be sure to vibrate 305 mm (1’) into any previous pass before conducting any subsequent pass (see below).

Vibration

It is essential to vibrate the concrete to eliminate air bubbles that may become trapped in the forms. Not vibrating can severely compromise the strength of the walls.

When vibrating the concrete, start one web space away from a corner, then vibrate every 406 to 610 mm (16” to 24”), or two spaces, from thereon, avoiding as best as possible the vertical joints of the forms. Avoiding the vertical joints of the forms helps prevent bulging or flaring (especially the bottom row) at these locations.

Vibrate as close as possible to any RO bucks to ensure the reinforcements around the openings become well covered with concrete. The same is true for areas around any structural or mechanical sleeves or

box outs. The concrete at the bottom of RO bucks should be finished level with the bottom of the horizontal 2x4s at this time.

Make sure you vibrate into the previous lift a maximum depth of 305 mm (1'). Place the vibrator quickly into the concrete and remove it slowly, at a rate of 305 mm (1') per second. Remain 1219 mm to 1524 mm (4' to 5') behind the concrete placer.

NOTE: Pulling the vibrator up slowly forces the increased vibration pressure upwards. Conversely, if you insert the vibrator into the wall slowly, the vibration pressure is forced downwards adding additional unwanted concrete pressure against the face of the forms.

Clean Up

Any spilled concrete should be cleaned off the footings inside and outside of the wall.

Wall Alignment

After the concrete has been poured, levelled and the anchor bolts placed, check that all the corners, tees and free-standing ends are plumb, adjust the walls to the string lines, and once the final adjustments have been completed, get off the scaffold and walk around the excavation sighting the walls to confirm that they are straight.

SPECIAL CONSIDERATION: “T” INTERSECTION

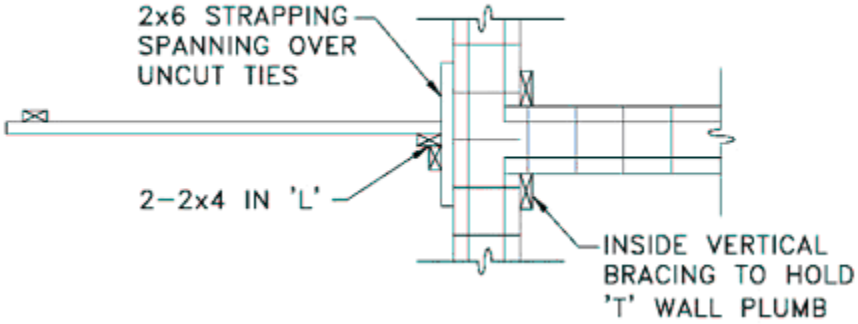

Figure 24: “T” Intersection

A typical “T” intersection is shown in Figure 23. T corners are created when a piece of EPS form is cut out of one block to create a space to insert another block. One example of where a T wall can occur is in a house, when the owner wants an insulated wall between the main house and the garage.

Extra Bracing

Cutting an opening in a block has negative implications regarding the strength of the block, so special attention is required.

For ‘T’ walls 6 courses or higher, use a 2x6 strong back or 19 mm (¾”) plywood with a 2x4 strong back at the middle of the T to brace the wall. Back-brace the strong back to the ground or excavation bank so that it resists outward movement (see Figure 24).

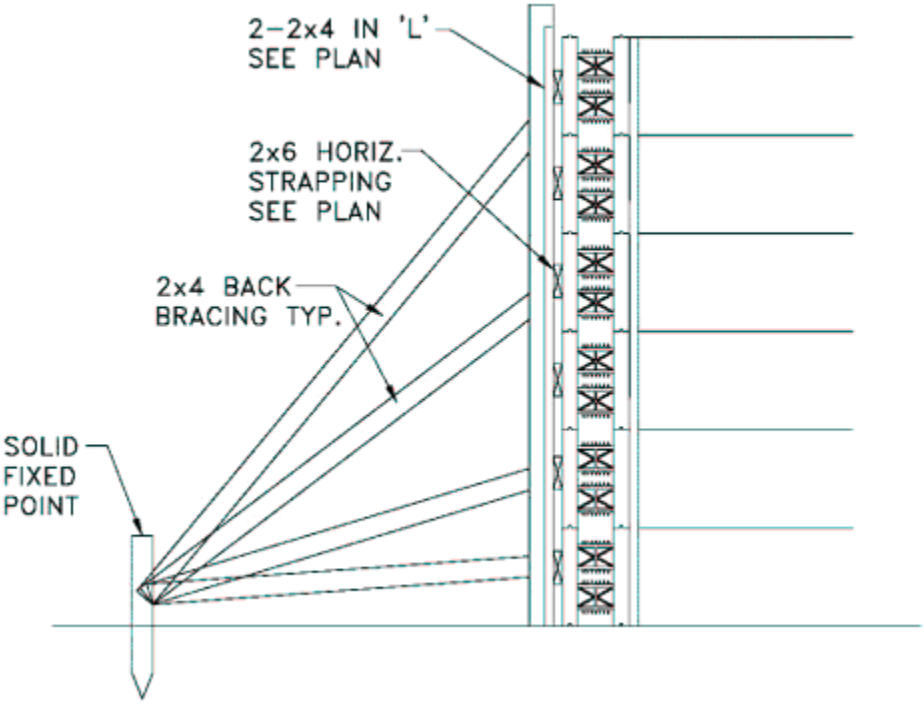

Figure 25: Extra Bracing

Intersections

On the entire height of the wall that forms the top of the T, all the courses have the EPS removed where the intersecting wall connects. The intersecting wall can then be set right inside the wall that forms the top of the T. From a practical view, this latter wall can be constructed last to make access to the job site easier. It is also easier to make the wall plumb using this method.

In all cases, you should brace the inside and outside corners to keep the corners plumb. Also, when vibrating the concrete, stay at least one undisturbed web away from the T on either side.

SPECIAL CONSIDERATION: CONSTRUCTING TWO-FOOT CORNERS

Constructing Two-Foot Corners with 152 mm (6”) Forms

To build a 610mm (2’) corner, take two opposing corner blocks (a right-hand and a left-hand). Cut 76 mm (3”) off the short side of the right-hand corner and 248 mm (9 ¾”) off the long side of the left-hand corner. Glue and wire the cut faces together and wrap them with a multi-strap. For the next course, reverse the order of the corners and proceed as above. It is worth pre-assembling 610 mm (2’) corners for ease of construction.

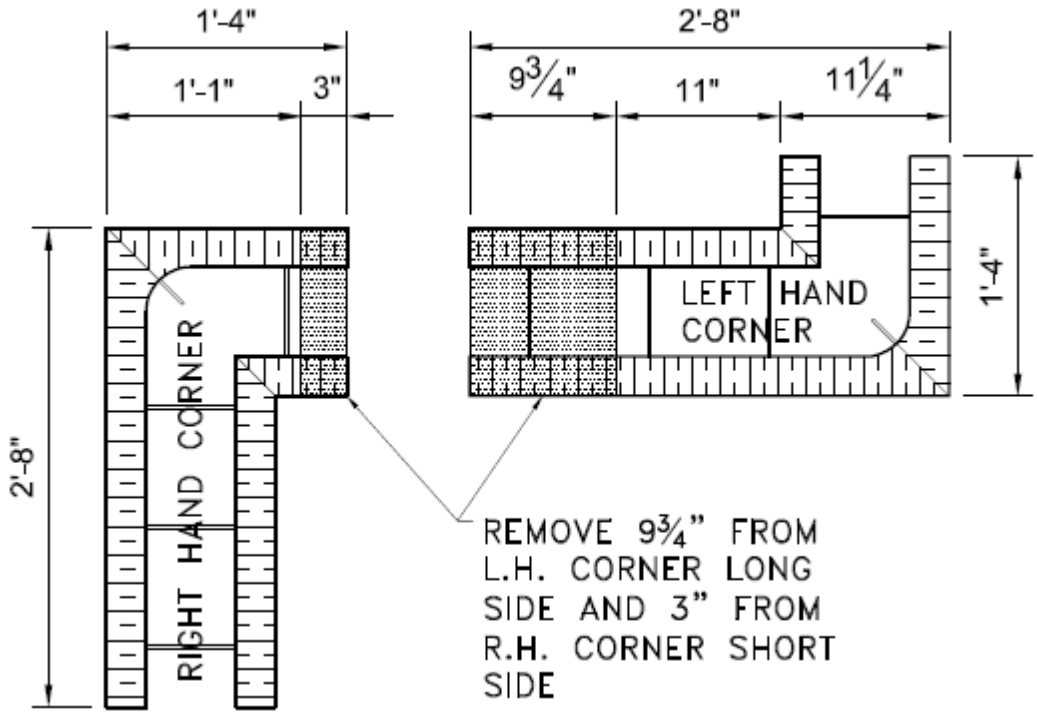

Figure 26: Two-Foot Corners – 152 mm (6”) Block.

Constructing Two-Foot Corners with 203 mm (8”) Forms

To build a 610mm (2’) corner, take two opposing corner blocks (a right-hand and a left-hand). Cut 25 mm (1”) off the short side of the right-hand corner and 197 mm (7 ¾”) off the long side of the left-hand corner. Glue and wire the cut faces together and wrap them with a multi-strap. For the next course, reverse the order of the corners and proceed as above. It is worth pre-assembling 610 mm (2’) corners for ease of construction.

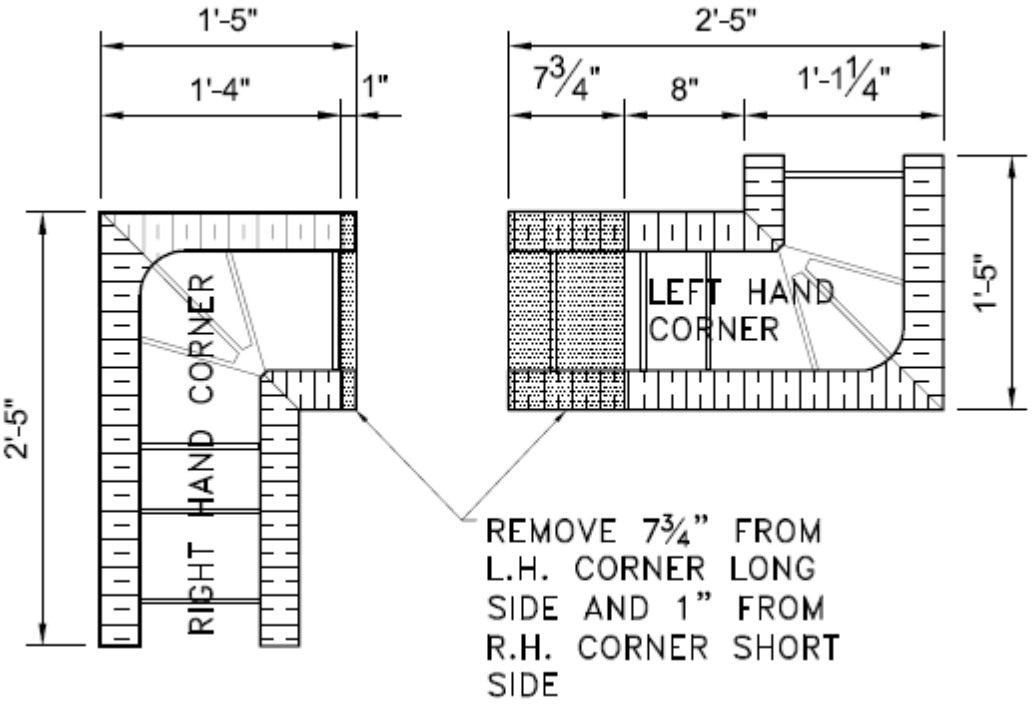

Figure 27: Two-Foot Corners – 203 mm (8”) Block.

ADVANTAGE ICF BRICK LEDGE INSTALLATION

Please review these items before installing the Advantage ICF System Brick Ledge Product

1. Be sure to bend stirrups to fit as in the sketch provided, this is a simple two part stirrup, (see sketch) they should be long enough to fall between the horizontal bars, one additional horizontal bar is required in the block below the brick ledge to create a space for the stirrups to fall in between. ***Be sure that the hooks are bent to lock over the horizontal rebar located at the top and front of the brick ledge***.
2. Glue all brick ledge block down to the block below with a light bead of low expansion adhesive. (see sketch)
3. Tie down any blocks above the brick ledge to the brick ledge using an Advantage bundle strap with a loop in the end, a zip strip or rebar wire. ***This is important because the large amount of concrete at the top of the brick ledge will want to force the block above in an upwards direction. (see sketch)***
4. Glue the full foam interlock side of the block above the brick ledge down to the brick ledge block. (see sketch)

MOST IMPORTANT

5. When tying block down to each other always tie tight to the face of the block where the tie/web is the strongest.
6. Brick ledge block holds extra concrete out past the center line of the wall creating a cantilever of extra weight, extra scaffolding may be required for wall assemblies using brick ledge block until concrete has cured.
7. Engineers may have to review acceptable loads for certain masonry products being used, always review with your local building authority.
8. Be sure to review both the Advantage installation manual and the installation video prior to starting the project, keep a copy of the installation manual on site for any site reviews.
9. Be sure to contact your Plasti-Fab sales representative for any insulation needs or concerns.

Installation of 152 mm (6”) Brick Ledge with 152 mm (6”) Block Above

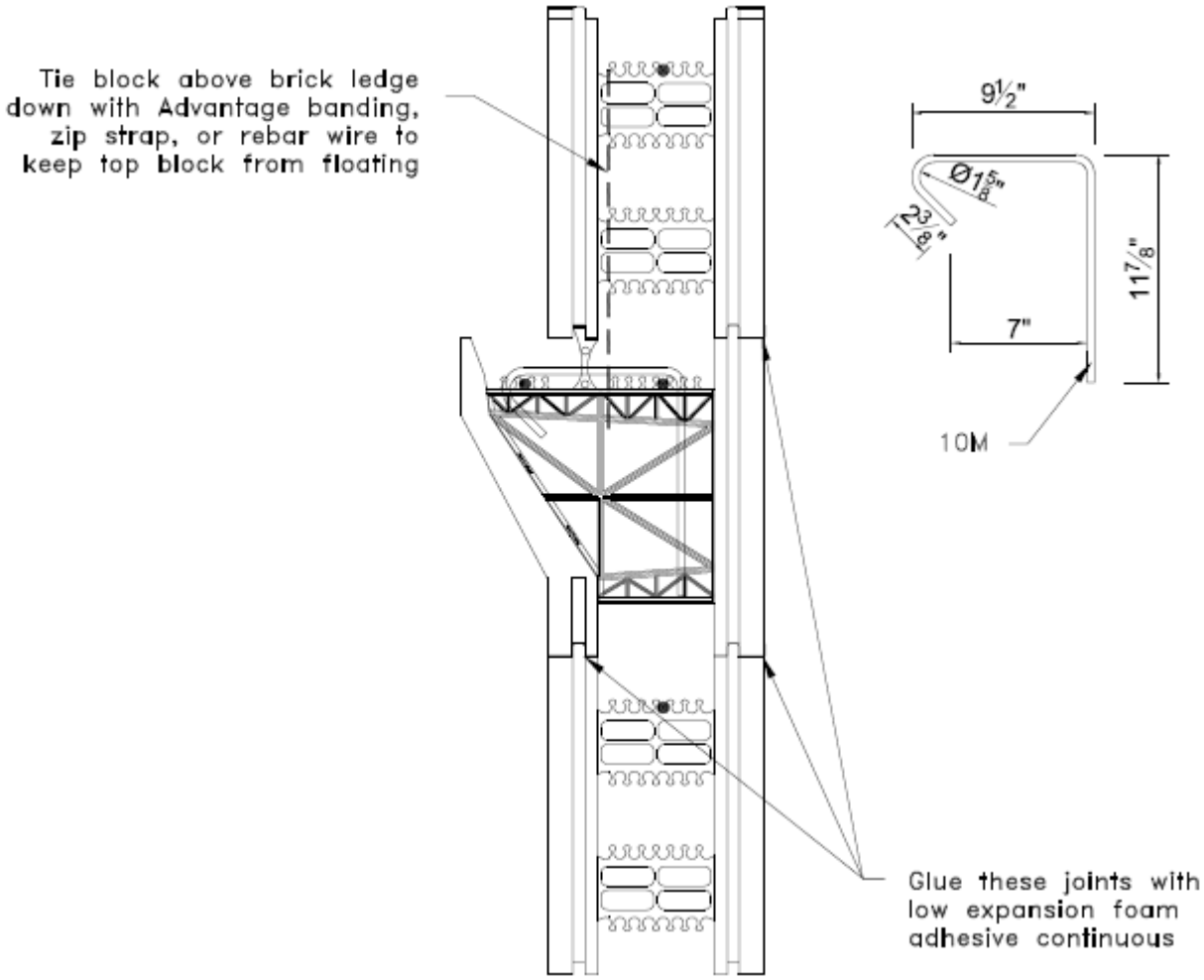

Installation of 203 mm (8”) Brick Ledge with 152 mm (6”) Block Above

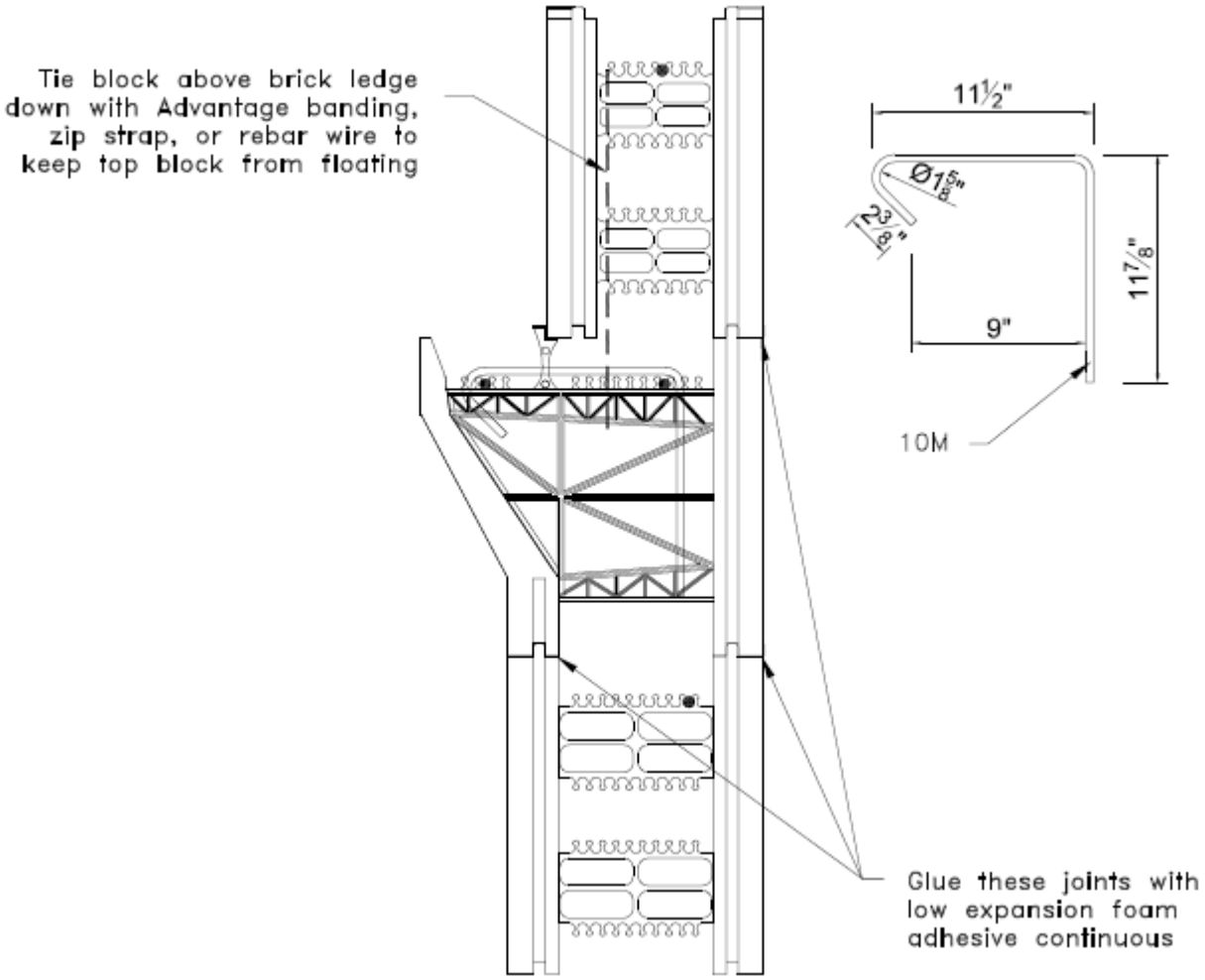

Installation of 203 mm (8”) Brick Ledge with 203 mm (8”) Block Above

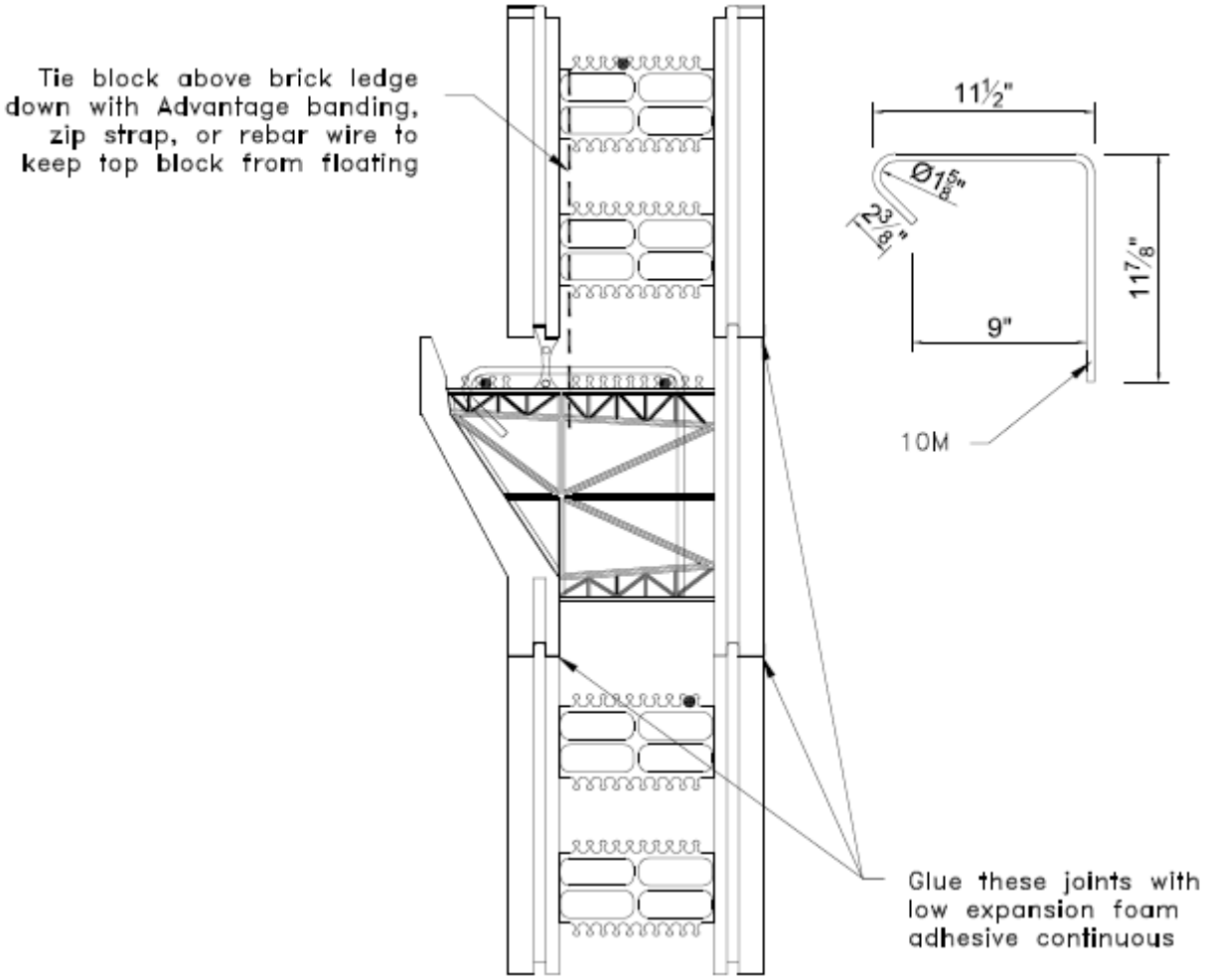

GLOSSARY

Batter Boards	Stakes used when surveying the layout of buildings.
Block	insulating concrete forms.
Courses	Horizontal rows of forms.
Dead Load	Weight of materials used to build the structure, expressed in pounds per square foot or in kilo-Newton per square metre.
Dry-fit	Cut and check pieces for fit before foaming, wiring or fastening in place permanently.
EPS tabs	Moulded interlock running perpendicular to interlock tongue.
EPS	Expanded Polystyrene.
Factory edge	A non-cut moulded edge of block.
Filler block	Block cut to fit non-standard dimensions.
Glue or low expansion foam	Polyurethane foam used to bond form units together, fill voids between forms and hold forms to layout lines.
Gussets	Plywood or dimensional lumber used to reinforce forms where necessary. Multi-strap may also be used in some cases.
Half forms – male or female	A standard form unit cut longitudinally in half and used to adjust the wall height (1524 mm (5') or 2743 mm (9') wall). The male half would be used as a bottom starter course, the female used as the top course.
ICF	Insulating Concrete Forms.
Interlock	Moulded modified tongue and groove at top and bottom of forms that align webs vertically and hold the forms together laterally at horizontal joints.
Kickers	2x4 or 2x6 lumber temporarily nailed to the concrete footing on the wall line to keep the corner forms located at the proper location.
Ledger	Wooden board to which roof or floor joists are attached.
Lintel	Concrete beam which spans an opening.
Live Load	Variable weight of items such as cars, people, furniture, snow etc. Expressed in kilo-Newton per square metre or pounds per square foot.

Multi-strap	24 ga. ”L” strap measuring 51 mm (2”) wide x 533 mm (21”) one arm and 940 mm (37”) the opposing arm. The multi-strap is used to tie the corner forms back to the first full forms on either side. The straps can also be used to fasten corner battens, stucco wire, drywall, etc.
Reinforcing bar (rebar)	A reinforcing bar, or rebar, is a common steel bar of various sizes (10M/#4, 15M/#5, etc.) commonly used in reinforced concrete structures. It is usually formed from carbon steel, and is given ridges for better mechanical anchoring into the concrete. It can also be described as reinforcement or reinforcing steel.
Right and left-hand corner blocks	Standing inside the building foundation and facing a 90 degree corner, the location of the short leg of the corner block will be on the right for a right hand corner block and on the left for left hand corner block.
RO	Rough opening or rough stud opening in a wall into which a door or window frame is mounted.
RO buck	Rough opening buck. A box made of dimensional lumber, plywood or preformed vinyl to window and door rough opening dimensions.
Scaffolding/bracing	Used to brace the wall during construction and concrete placing, as well as straightening the wall, and providing a safe work platform.
Sleeves or box-outs	Cylindrical or rectangular inserts in forms for various penetrations; make-up air and fresh air, mechanical exhaust vents, electrical, gas lines, hose bibs, etc.
Specs or specifications	Architectural or engineering drawings.
SPF	Wood specification spruce pine fir.
Web or tie	Co-polymer connector that holds the panels of the Advantage ICF System together. The webs also support the horizontal rebar.